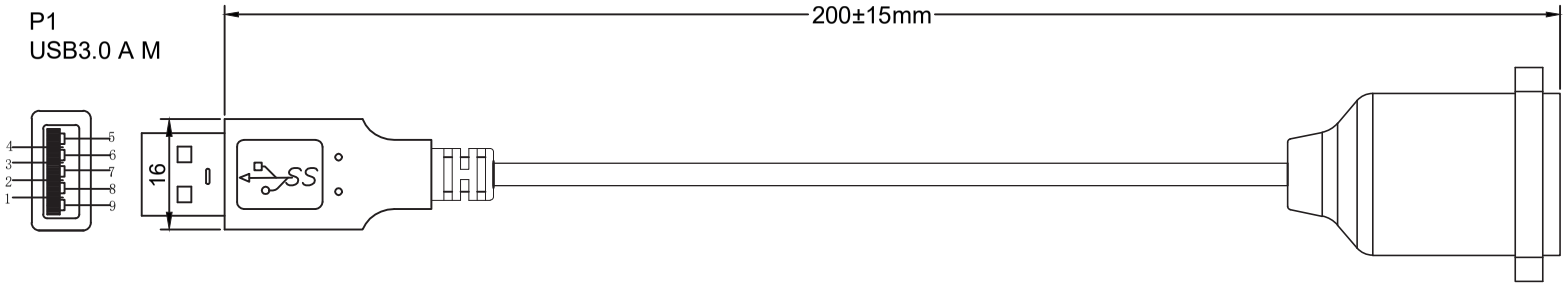

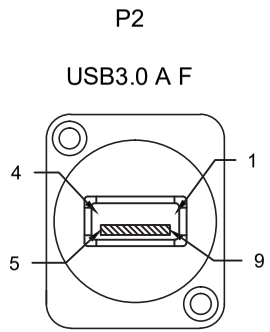

PIN ASSIGNMENT

P1	P2
1	1
2	2
3	3
4	4
5	5
6	6
7	7
8	8
9	9
S	S

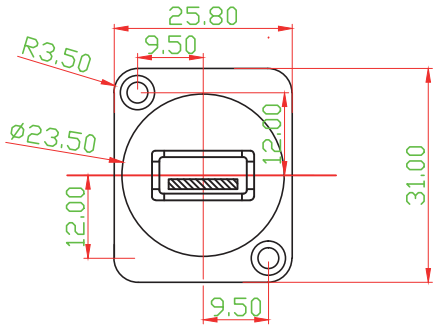

DELOCK
we move the world

Dat	2022 / 11 / 29	Title: D-Type SuperSpeed USB 5 Gbps (USB 3.2 Gen 1) Cable	
Unit	mm	Item no.	87967
Projection		Barcode	4043619879670
Rev	A	File No.	88332