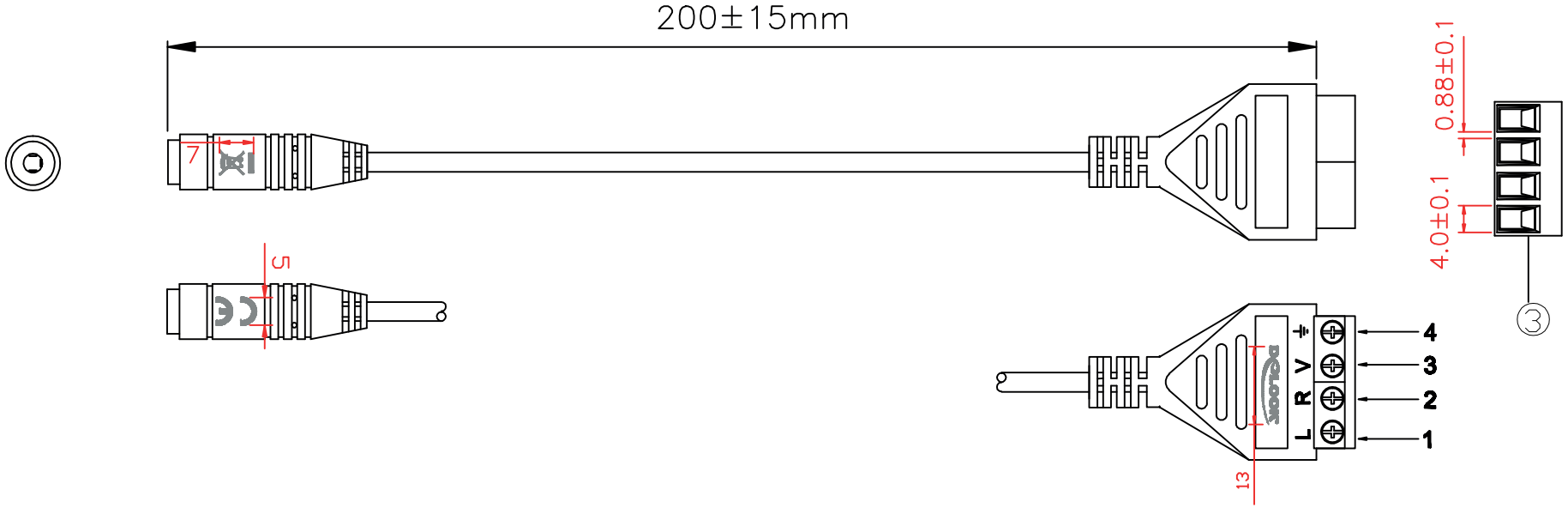

PIN ASSIGNMENT

ST02.5	Screw	Terminal
S.1	———	1
S.2	———	2
S.3	———	3
S.4	———	4

DELOCK
we move the world

Dat	2022 / 10 / 11	Title:	Stereo jack 2.5 mm 4 pin Cable to Terminal Block Adapter 20 cm
Unit	mm	Item no.	66294
Projection		Barcode	4043619662944
Rev	A	File No.	88366